MAGNETIC LINEAR ENCODERS
"SLIM LINE PROFILE SYSTEM"

PS 200

- Slim Line type aluminum profile
- Integrated magnetic tape in profile
- Easy mounting
- Resistant to humudity
- IP67 protection class

کانون ابزار
تلفن :
021 66 39 39 00
0912 147 3023
ali5.ir

In PS 200 Profile systems, magnetic tape is integrated into the profile and taken under protection. The most important feature of the system is the ease of installation and the magnetic tape is under full protection.

Technical Specifications	
Life	Infinite (non-contact system)
Body Material	Aluminum
Sensor-tape reading distance	0,1mm – 2mm
Magnetic Tape	B5 (Optional B2)
Operating Temperature	-25°C...+85°C
Protection Class	IP67

Recommended Sensors with PS 200 Series

MLS-120/121

MLS-130

MLS-210

Order Coding

Model

PS 210
PS 220
PS 230

Measurement Distance

Optional, user defined
(Examp: 300 mm)

PS 2XX	–	BX	–	XXX

Magnetic Tape

B5
B2

WARNING (!) The proximity of the band with comparator, magnet or similar instruments having a magnetic effect, disrupts the working structure of the band. The product should be kept away from devices that generate this type of magnetic field.

PS 210 - Mechanical Dimensions

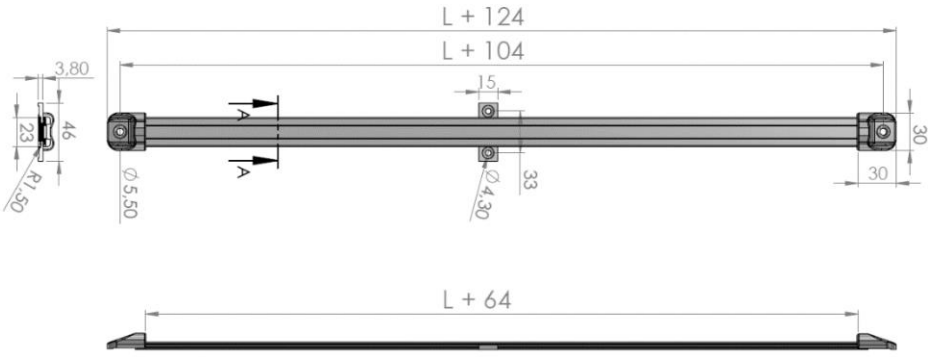

PS 220 - Mechanical Dimensions

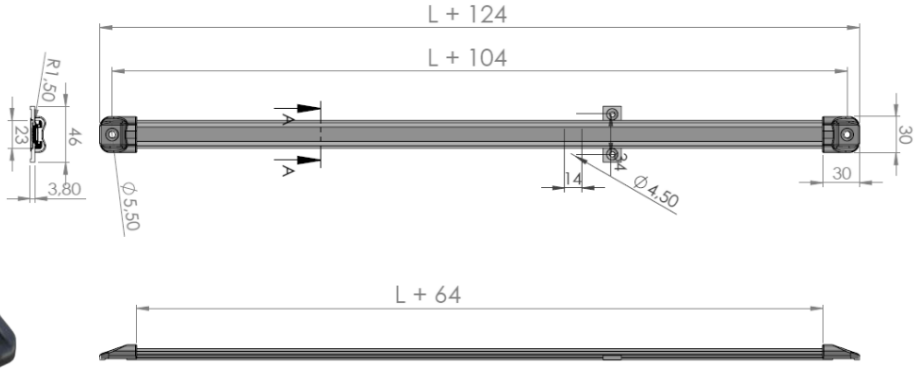

PS 230 - Mechanical Dimensions

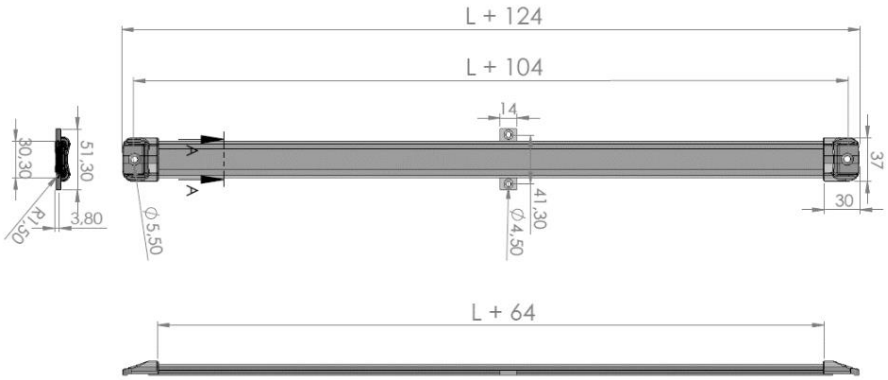

Atek Elektronik Sensör Teknolojileri Sanayi ve Ticaret A.Ş.

Gebze OSB, 800. Sokak, No:814 Gebze/KOCAELİ/TURKEY
Tel: +90 262 673 76 00 Fax: +90 262 673 76 08
www.ateksensor.com info@ateksensor.com