فروشگاه کانون ابزار
ali5.ir
021 66393900 - 09121473023

ROTARY POTENTIOMETER

"20 mm Hollow Shaft, 59.80 mm Body Diameter"

RHP 60



GENERAL FEATURES

- 150° ve 340° electrical angle
- 20 mm hollow shaft
- 59.80 mm body diameter
- Potentiometric output
- High linearity up to ±%0.5
- Long life up to 10 million movements
- Dust and moisture resistant, IP63 protection class
- No mechanical rotation limitation

APPLICATION FIELDS

- Textile machinery
- Automatic door control systems
- Automotive
- All kinds of control and mesurement applications

TECHNICAL FEATURES

Electrical Data	
Independent Linearity	±%0.5
Repeatability	0.1° max.
Output Type	**Potentiometric**
Electrical Angle	150°, 340°
Supply Voltage	42V max.
Resistance Values	1K, 2K, 5K, 10K
Resistance Tolerance	±%20
Resistance Element	Conductive Plastic
Resolution	Infinite
Recommended Wiper Current	100 µA max.
Power Rating	0.5W / 40°C max.
Minimum Life (electrical)	10 million movements
Electrical Connection	3x0,102 mm^2 soft PVC cable (standard 1m, optional others)
Mechanical Data	
Dimensions	See mechanical dimensions table
Mechanical Angle	360°, continuous
Torque	6 Ncm max.
Operating Temperature	-25°C ... +75°C
Storage Temperature	-25°C ... +105°C
Hosuing Material	Aluminum
Protection Class	IP63

فروشگاه کانون ابزار
ali5.ir
021 66393900 - 09121473023

ELECTRICAL CONNECTIONS

SIGNAL	CABLE COLOR
+V	Green (1)
Potentiometric output	Red (2)
-V	Yellow (3)

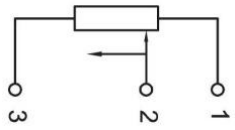

Potentiometer connection (voltage divider)

MECHANICAL DIMENSIONS (mm)

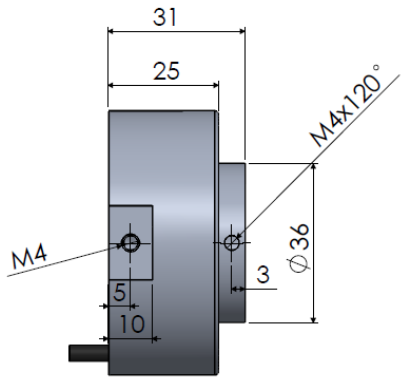

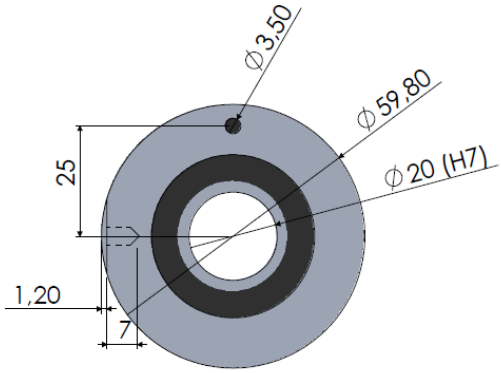

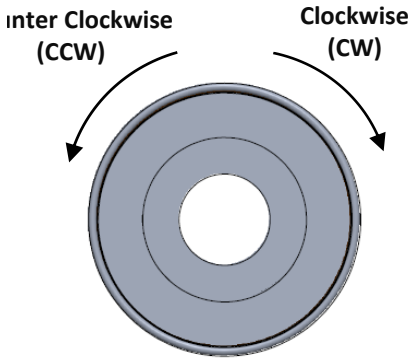

ORDER CODE

Model

Angle
150 : 150°
340 : 340°

Cable Length
1M: 1 meter (standard)
*Optional others

RHP	-	XXX	-	XXX	-	XX	-	XXX	-	XXX

Body Diameter
060: 59.80 mm

Resistance Value
1K: 1K
2K: 2K
5K: 5K
10K: 10K

Output Type
No Code: Potentiometric

فروشگاه کانون ابزار
ali5.ir
021 66393900 - 09121473023