فروشگاه کانون ابزار
ali5.ir
021 6639 3900 - 0912 147 3023

ROTARY POTENTIOMETER

"6...8 mm Hollow Shaft, 31 mm Body Diameter"

RHP 30



GENERAL FEATURES

- 20°, 45°, 150°, 180°, 354° electrical angle
- Hollow shaft options from 6mm to 8mm
- 31 mm body diameter
- Potentiometric, 0-10V, 4-20 mA or 0-20mA output
- High linearity up to ±%0.5
- Long life up to 10 million movements
- Dust and moisture resistant, IP63 protection class
- No mechanical rotation limitation

APPLICATION FIELDS

- Textile machinery
- Automatic door control systems
- Automotive
- All kinds of control and mesurement applications

TECHNICAL FEATURES

Electrical Data		
Independent Linearity	±%0.5	
Repeatability	0.1° max.	
Output Type	**Potentiometric**	**0-10V, 4-20 mA, 0-20 mA**
Electrical Angle	20°, 45°, 150°, 180°, 354°	
Supply Voltage	42V max.	12...30 VDC
Resistance Values	1K, 2K, 5K, 10K	-
Resistance Tolerance	±%20	-
Resistance Element	Conductive Plastic	-
Resolution	Infinite	12 bit
Recommended Wiper Current	100 µA max.	-
Power Rating	0.5W / 40°C max.	-
Minimum Life (electrical)	10 million movements	
Electrical Connection	3x0,102 mm^2 soft PVC cable (standard 1m, optional others)	
Mechanical Data		
Dimensions	See mechanical dimensions table	
Mechanical Angle	360°, continuous	
Torque	0.5 Ncm max.	
Operating Temperature	-25°C ... +75°C	
Storage Temperature	-25°C ... +105°C	
Hosuing Material	Aluminum	
Protection Class	IP63	

فروشگاه کانون ابزار
ali5.ir
021 6639 3900 - 0912 147 3023

ELECTRICAL CONNECTIONS

Potentiometer Connection

SIGNAL	CABLE COLOR
+V	Green (1)
Potentiometric output	Red (2)
-V	Yellow (3)

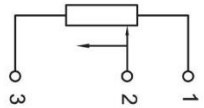

Potentiometer connection (voltage divider)

0-10V Connection

SIGNAL	CABLE COLOR
+VDC	Green
Analog Output	Red
-VDC	Yellow

4-20mA or 0-20 mA Connection (2-wire)

SIGNAL	CABLE COLOR
+VDC	Red
Analog Output	Green
	Yellow

MECHANICAL DIMENSIONS (mm)

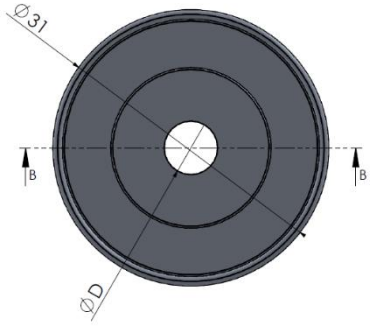

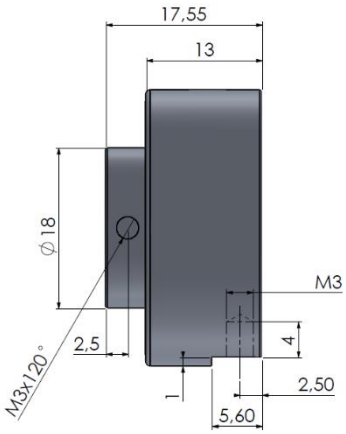

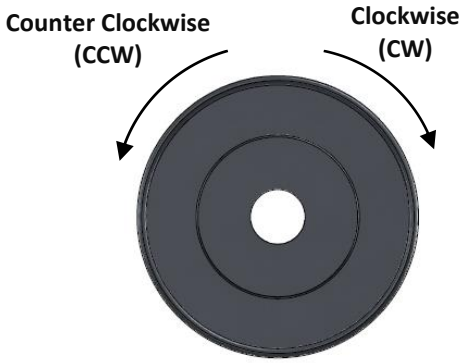

ØD: 6mm...8mm

ORDER CODE

Model

Angle

20 : 20°
45 : 45°
150 : 150°
180 : 180°
354 : 354°

Hollow Diameter

Selectable from 6mm to 8mm

Output Type

No Code: Potentiometric
A0: 0-20 mA (CW)
NA0: 0-20 mA (CCW)
A: 4-20 mA (CW)
NA: 4-20 mA (CCW)
V: 0-10 V (CW)
NV: 0-10 V (CCW)
*CW: Clockwise
CCW: Counter Clockwise

RHP	-	XXX	-	XXX	-	XX	-	XX	-	XXX	-	XX	-	X

Body Diameter

030: 31 mm

Resistance Value

1K: 1K
2K: 2K
5K: 5K
10K: 10K
*Resistance value selection is only available in potentiometric output model.

Cable Length

1M: 1 meter (standard)
*Optional others

Cable Output Direction

No Code: Backside
Y: Side

Sample Order Code:

For potentiometric output: RHP 030-45-5K-6-1M-Y
For analog output: RHP 030-45-6-1M-A-Y

فروشگاه کانون ابزار
ali5.ir
021 66393900 - 09121473023